PH202-1G
Spring 2014

Mock exam II

Print off your own copy of the mock exam and do your best to complete it before the mock exam session. We will not take any time during the mock exam session to complete the mock exam.

This mock exam will be most beneficial to you if you complete it under testing conditions. It should take you about 1 hour and 30 minutes to complete, but keep in mind that your class exam will be only 50 minutes. Use the equation sheet provided by Dr. Wenger on Blackboard and the same calculator that you plan to use during the actual exam. If you get stuck, try to use the strategy in the document called "How to solve a physics problem" to help you. Do not use your book or notes from class until you have attempted the problems in the mock exam on your own at least once.

1. Three capacitors each have a capacitance C. What is the ratio of the equivalent capacitance when the capacitors are wired in parallel to the equivalent capacitance when the capacitors are wired in series?

   A. 1 / 9
   B. 9
   C. $1 / C^2$
   D. C^2
   E. 1

2. Find the magnitude and direction of the current through each of the three batteries in the circuit depicted to the left.

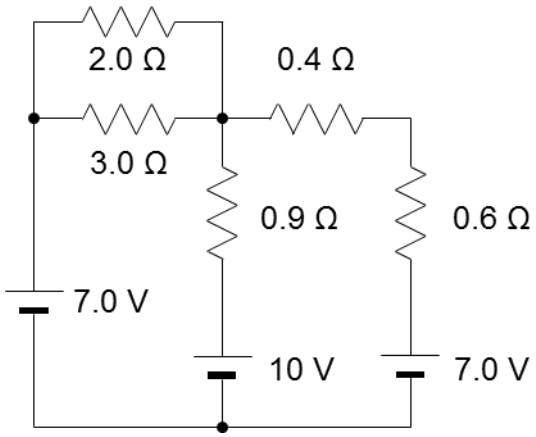

PH202-1G
Spring 2014

3. The capacitor in the circuit depicted to the right initially contains no charge. At time t = 0, the switch is closed to the left. When the capacitor has reached its equilibrium charge, the switch is closed to the right. a) Find the time required for the capacitor to reach 63 % of its equilibrium charge. b) After the switch is closed, find the time required for the capacitor to lose 63 % of its equilibrium charge.

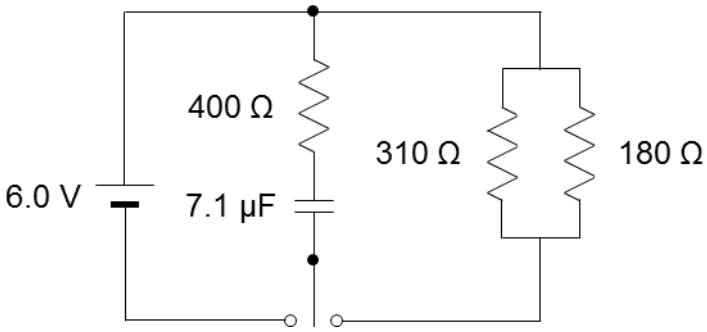

4. _____ (T / F) Magnetic fields cause charged particles moving in a direction perpendicular to the field to accelerate.

5. A physics professor is trying to perform an experiment which requires an electron to move in a straight line. The electric engineers in the lab upstairs have created a massive electric field to see if they can levitate a frog. Unfortunately, the electric field is causing the electron in the physicist's lab to be deflected upward. If the electron is moving to the right, in what direction should the physicist create a magnetic field to counteract the deflection of the electric field?

   A. Upward
   B. Downward
   C. Into the page
   D. Out of the page
   E. To the left

6. A 35 cm long wire carries a current of 0.17 A. A second wire with the same length carrying a current of 0.13 A in the same direction as the first wire is placed 10 cm away, oriented parallel to the first wire. Calculate the magnitude and direction of the magnetic force on each wire.

7. A rectangular loop of wire with a width of 5.0 cm and a length of 15 cm sits in a square region of uniform magnetic field. The magnetic field points into the page with a magnitude of 0.58 T. A force is applied to the shorter side of the wire such that it moves to the right with a constant speed of 1.2 m/s. Find the magnitude and direction of the induced emf when the loop a) is moving completely within the magnetic field and b) is moving out of the region containing the magnetic field.

8. _____ (T / F) An electrical generator produces alternating current.

9. Which of the following changes will have the largest effect on the amplitude of the emf generated by a coil of wire rotating in a uniform magnetic field?

   A. Increasing the number of turns in the coil by a factor of 2
   B. Increasing the strength of the magnetic field by a factor of 2
   C. Increasing the area of the coil by a factor of 2
   D. Increasing the frequency of the coil's rotation by a factor of 2
   E. These changes will all have the same effect on the amplitude of the emf

10. If the number of turns in the primary coil of a transformer is increased while keeping the number of turns in the secondary coil the same, which of the following changes will not occur?

    A. The ratio of the voltage in the primary coil to the voltage in the secondary coil will increase
    B. The ratio of the current in the primary coil to the current in the secondary coil will increase
    C. The ration of the power in the primary coil to the power in the secondary coil will increase
    D. Both B and C
    E. All of the above

11. _____ (T / F) In a diode consisting of a junction between an *n*-type semiconductor and a *p*-type semiconductor, current can flow from the *p*-type semiconductor to the *n*-type semiconductor but not from the *n*-type semiconductor to the *p*-type semiconductor.

12. An ac generator with a peak voltage of 9.0 V is connected to a resistor, a capacitor, and an inductor in series. The resistor has a resistance of 7.5 Ω, the capacitor has a capacitance of 200 μF, and the inductor has an inductance of 40 mH. a) If the ac generator operates with a frequency of 400 Hz, what is the root-mean-square current in the circuit? b) What is the resonant frequency of this circuit? c) What is the root-mean-square current at the resonant frequency?

13. Which of the following statements is true for an electromagnetic wave?

    A. The magnitude of the electric field is greater than the magnitude of the magnetic field
    B. The electric field contributes more to the total energy of the wave than the magnetic field
    C. The intensity of the wave does not depend on the magnitude of the magnetic field
    D. Both A and B
    E. Cats do not like to play with electromagnetic waves

14. Calculate the speed necessary for the driver of a car to perceive the red light from a traffic stoplight as green light. Assume that red light has a wavelength of 650 nm and that green light has a wavelength of 510 nm.